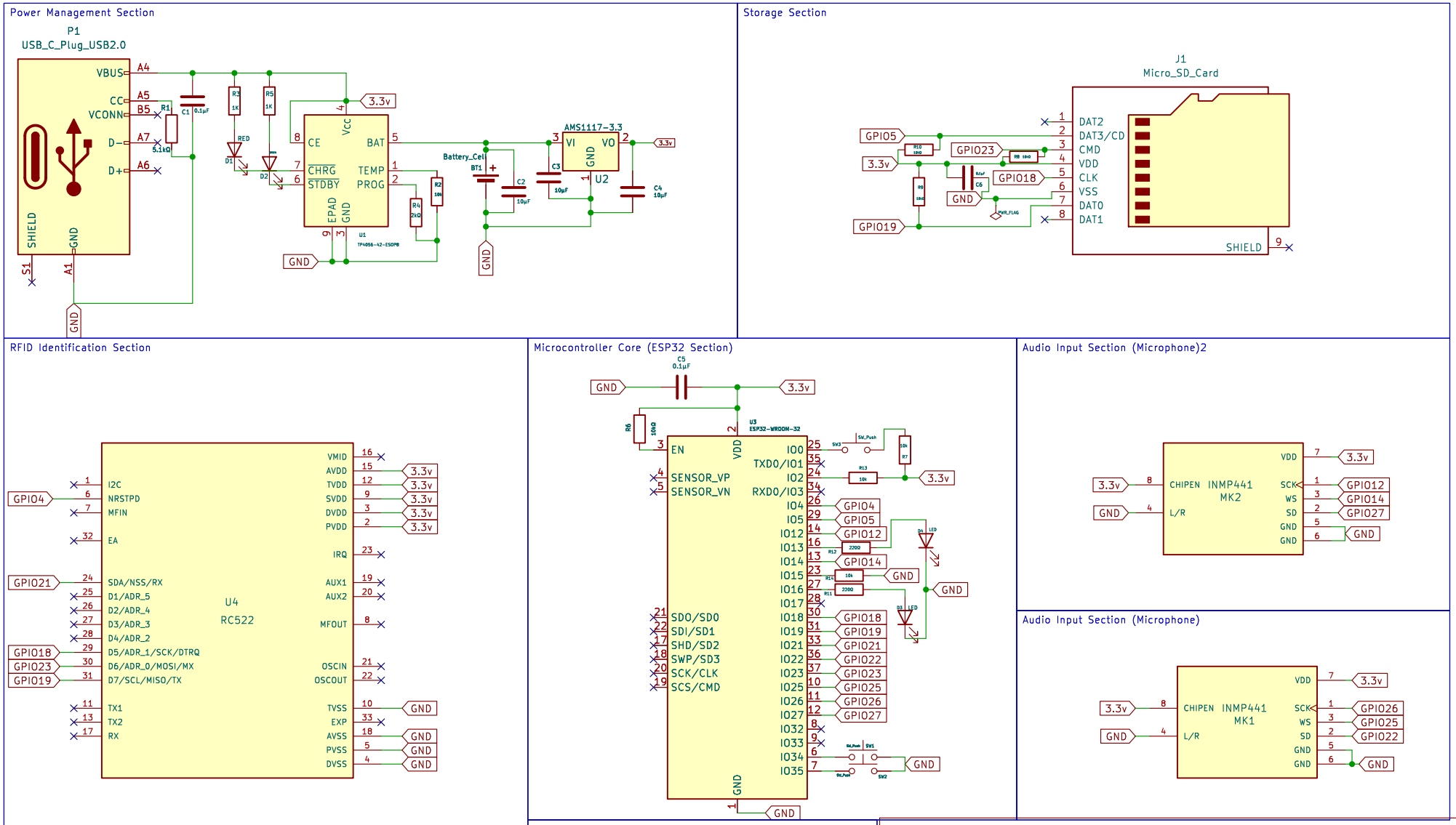

PUNHA

Sheet: /

File: Smart AI Voice Note Device.kicad_sch

Title:

Size: A4	Date: 2026-03-29	Rev:
KiCad E.D.A. 9.0.1		Id: 1/1